DIY Alpha Murphy Bed

(Vertical Spring Kit Only Version)

WWBeds
Custom Furniture

It's like having your own shop!

Assembly Instructions

Questions call 501.753.9699

Designed to exceed International ISO 9002
Standards for Residential Specifications

Step 1: Check Your Components

Thank you for your purchase of this Murphy bed hardware. We try to make this projects as easy as possible for you. Take a minute and check your contents.

Hardware

Qty.	Frame Carton Items	Comments	✔
2	Frame End Sections	Identical Head & Foot	☐
2	Frame Side Sections	Identical, Right or Left	☐
3(5)	Stiffeners - Bed Face (King Size)	Space evenly between Frame Sides	☐
2	Fold-away Legs	One Left - One Right	☐
1	Leg Connector Rod	Stabilizes and Eases Leg Operation	☐
	Hardware Card #3		
14	Bolt 10-24x1/2" (M6x12mm) Black	Bolt Frame corners	☐
2	Bolt 10-24x1 1/4" (M6 x 32mm) Black	Bolt Leg Stop Foot corners	☐
16	Nut 10-24 (M6) Black Nylock	Use with #1214 & #1213	☐
4	Angle 1"x1"x1 3/4" (25x25x44mm) Black	Use inside Frame corners	☐
2	1/2"x3/4" (13x19mm) Round Black Cylinder	Use with #1213 as Leg Stop	☐
	Hardware Card #4		
2	1 1/2"x5/16" (T1.5x40mm) Black Washer	Secure Leg inside Frame	☐
2	1 1/2"x.765" (T2.5x40mm) Black Washer	Secure Leg inside Frame	☐
2	1 1/2"x.765" (T2.5x40mm) Black Nylon Washer	Between Leg & outside of Frame	☐
2	Nut 5/16" (M8) Black Nylock	Secure Leg inside Frame	☐
2	Bolt 1/4"-20 Black Hex Head	Attach Leg to Leg Rod	☐
2	Star Washer for #1210	Attach Leg to Leg Rod	☐
	Hardware Card #5		
1	Nylon Web Strap with Buckle	Secure Mattress to Bed Frame	☐
2	3/4"x1/4" (T1.5x25mm) Washer	Secure Nylon Web Strap to Bed Face Panel under Mattress	☐
2	#8x5/8" (M4x15mm) Wood Screw	Secure Nylon Web Strap	☐
	Hardware Card #7 - King size includes 2 bags		
110	#8x5/8" (M4x15mm) Wood Screw	Attach Steel Bed Frame to Bed Face	☐

Qty.	Mechanism Carton Items	Comments	
1	Lift Mechanism - Right Side	Attach to Right Side Panel	☐
1	Lift Mechanism - Left Side	Attach to Left Side Panel	☐
2	#1 Bags containing 9 Springs each	Install correct number in each Mechanism	☐
1	13" Plastic Pipe	Used to set the Lift Mechanisms	☐
	Hardware Card #2		
10	Machine Screw 5/16-18 x 1 1/4"	To attach Lift Mechanisms to Side Panels	☐
4	Hex Head Bolt 5/16-18 x 1"	Attach Mechanism to Frame Side section	☐
2	Allen Head Bolt 5/16-18 x 1"	Position Mechanism Arm on Frame Side section	☐
16	Hex Head Nylock Nut	Secure Bolts and Screws	☐
1	Allen Wrench 5/16"	For Allen Head bolts	☐

Step 1
Below are the cut list and hardware needed for your size project.

Single/Twin Cut List

Overall Cabinet Dimensions
Mattress Size: 39” x 75” (12” Max Thickness) 44 ½”w x 85 ¼”h x 16”d (Projection from wall: 85”)

Qty.	Description	Width	Length	Material
2	(A) Bed Face Panels	21 ¼”	77 5/16	(¾” Plywood)
2	(B) Verticals	16”	85 1/4	(¾” Plywood)
1	(C) Headboard	14 ¼”	43	(¾” Plywood)
1	(D) Top Panel	14 ½”	43	(¾” Plywood)
1	(E) Top Facia	2 ¾”	43”	(¾” Plywood)
1	(F) Bottom Rear Base	6”	43”	(¾” Plywood)
1	(G) Bottom Kick	4”	43”	(¾” Plywood)
2	(H) Header Cleats	1 ½”	14 ½”	(¾” solid wood)
1	(I) Header Stop	1	43	(¾” Solid Wood)
12	Brackets	1 x 1 x 1 ¾” Other size brackets can be substituted.		
Various	¾” screws			
18	1 ½” screws			
10	1 ¼” finish nails			
16	2” Screws			
3	3” Screws			
50’	Veneer Tape	Match the species of wood you are using		

Parts (A) - (G) require 3 sheets of plywood for a Twin Size

Full/Double Cut List

Overall Cabinet Dimensions

Mattress Size: 54” x 75” (12” Max Thickness) 59 ½”w x 85 ¼”h x 16”d (Projection from wall: 85”)

Qty.	Description	Width	Length	Material
4	(A) Bed Face Panels	14 ⅜”	77 5/16	(¾” Plywood)
2	(B) Verticals	16”	85 1/4	(¾” Plywood)
1	(C) Headboard	14 ¼”	58”	(¾” Plywood)
1	(D) Top Panel	14 ½”	58”	(¾” Plywood)
2	(E) Top Facia	2 ¾”	58”	(¾” Plywood)
1	(F) Bottom Rear Base	6”	58”	(¾” Plywood)
1	(G) Bottom Kick	4”	58”	(¾” Plywood)
2	(H) Header Cleats	1 ½”	14 ½”	(¾” Solid wood)
1	(I) Header Stop	1	58	(¾” Solid Wood)
12	Brackets	1 x 1 x 1 ¾” Other size brackets can be substituted.		
Various	¾” screws			
18	1 ½” screws			
10	1 ¼” finish nails			
16	2” Screws			
3	3” screws			
50’	Veneer Tape	Match the species of wood you are using		

Parts (A) - (G) require 4 sheets of plywood for a Full Size

Queen Cut List

Overall Cabinet Dimensions

Mattress Size: 60” x 80” (12” Max Thickness) 65 ½”w x 90 ¼”h x 16”d (Projection from wall: 90”

Qty.	Description	Width	Length	Material
4	(A) Bed Face Panels	15 ⅞”	82 5/16”	(¾” Plywood)
2	(B) Verticals	16”	90 ¼”	(¾” Plywood)
1	(C) Headboard	14 ¼”	64”	(¾” Plywood)
1	(D) Top Panel	14 ½”	64”	(¾” Plywood)
2	(E) Top Facia	2 ¾”	64”	(¾” Plywood)
1	(F) Bottom Rear Base	6”	64”	(¾” Plywood)
1	(G) Bottom Kick	4”	64”	(¾” Plywood)
2	(H) Header Cleats	1 ½”	14 ½”	(¾” Solid Wood)
1	(I) Header Stop	1	64	(¾” Solid Wood)
12	Brackets	1 x 1 x 1 ¾” Other size brackets can be substituted.		
Various	¾” screws			
18	1 ½” screws			
10	1 ¼” finish nails			
16	2” Screws			
3-4	3” Screws			
50’	Veneer Tape	Match the species of wood you are using		

Parts (A) - (G) require 4 sheets of plywood for a Queen Size

King Cut List

Overall Cabinet Dimensions

Mattress Size: 76” x 80” (12” Max Thickness) 81 ½”w x 90 ¼”h x 16”d (Projection from wall: 90”

Qty.	Description	Width	Length	Material
4	(A) Bed Face Panels	19 ⅞”	82 5/16”	(¾” Plywood)
2	(B) Verticals	16”	90 ¼”	(¾” Plywood)
1	(C) Headboard	14 ¼”	80”	(¾” Plywood)
1	(D) Top Panel	14 ½”	80”	(¾” Plywood)
2	(E) Top Facia	2 ¾”	80”	(¾” Plywood)
1	(F) Bottom Rear Base	6”	80”	(¾” Plywood)
1	(G) Bottom Kick	4”	80”	(¾” Plywood)
2	(H) Header Cleats	1 ½”	14 ½”	(¾” Solid Wood)
1	(I) Header Stop	1	80	(¾” Solid Wood)
12	Brackets	1 x 1 x 1 ¾” Other size brackets can be substituted.		
Various	¾” screws			
18	1 ½” screws			
10	1 ¼” finish nails			
16	2” Screws			
3-4	3” Screws			
50’	Veneer Tape	Match the species of wood you are using		

Tools Needed

- Power Drill
  - Drill bits ⅛”, 3/16”, ⅝” countersink
- Power Saw, Table Saw or Circular Saw
- Jigsaw or Coping Saw
- Phillips-Head screwdriver or bits for drill
- Tape Measure
- Hammer
- Clamps
- Household Iron for Veneer Tap and Utility Knife
- ½” socket, wrench, or driver

Cut Parts

Cut parts according to your size cut list.

Step 2: Edge Band your parts

Most home stores will have rolls of veneer edge banding to match your plywood. This edge banding can be ironed on using a household iron.

If using iron, empty all the water out to eliminate any steam. Turn the steam settings off and use the Cotton setting.

Not all edges need to be banded. Only those that will be seen. Below is a list of what edges should receive the edge banding.

Step 2-1
Cut a piece of edge banding about 1" longer than the length of the panel that you are banding. You can use scissors to cut it or simply fold it in half and it will snap apart.

Step 2-2
Turn on the clothes iron and set the temperature to the "medium" or "cotton" setting. If possible clamp the panel in the upright position so the iron can be held horizontally.

Step 2-3
Starting at one end of the banding and work towards the opposite end. Move the iron slowly along the banding while applying downward force

You should be able to see a small bead of adhesive expand out from the underside of the banding if the adhesive is activating. To get the best bond possible, pressure should be applied behind the iron with a block of wood.

Step 2-4
Apply pressure until the adhesive cools and hardens.
Occasionally the side edges of the banding can lift slightly from the substrate. To fix this, simply use the block of wood (held at a 45 degree angle) to press the edge back onto the substrate while the adhesive is still warm.

Step 2-5
End trim the overhang by using a razor knife. Put the block on top that you were using to apply pressure and use the razor knife to trim off the ends.

Step 2-6

A flush trimming tool is inexpensive and definitely makes the trimming process easy and 99% fool-proof. Simply press the trimmer against on to the face of the panel and slide it forward so that the blade cuts off the excess banding. To get a clean edge, you must pay attention to the direction of the grain. Most edge banding has a reasonably straight grain but there is always a slight angle. The best cut comes from sliding the trimmer in the direction of the grain as shown below. Cutting in any other direction will cause tear out.

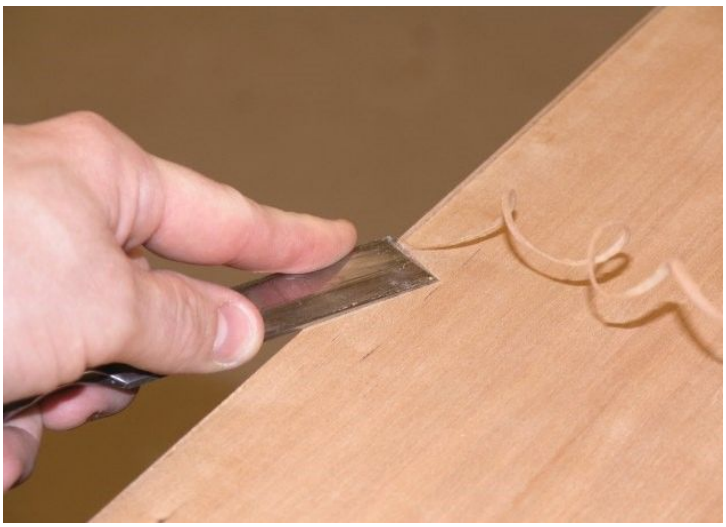

A sharp chisel can also be used to trim the edges. Be sure to skew the chisel so that the pressure forces the banding against the wood edge as shown. This method often leaves a bit of tear-out on the banding but the next step will smooth them out with very little effort.

What to edge band?

- 4-(A) Bed Face Panels
    - All outside edges.
    - On the outside panels the top (short) and outside (long) edge
    - On the inside panels just the top (short) edge
    - *Note: twin will only have the two outside panels.*
- 2-(B) Verticals
    - One long edge
- (C) Headboard
    - One long edge
- (D) Top Panel
    - 3 edges
    - 1 front (long) edge and two side (short) edges.
- (E) Top Facia
    - One long edge
- (F) Bottom Rear Base
    - One long edge
- (G) Bottom Kick
    - One long edge

Step 3: Build the Top Panel/Header

Using the (D) Top Panel, (E) Top Facia and, 2- (H) Header Cleats assemble the Header.

2-1 Attach the Top Facia to the Top Panel with 1 ¼” finish nails (not supplied). Top Facia will overlap the lower side of the Top panel by ½” (see figure 2-1)

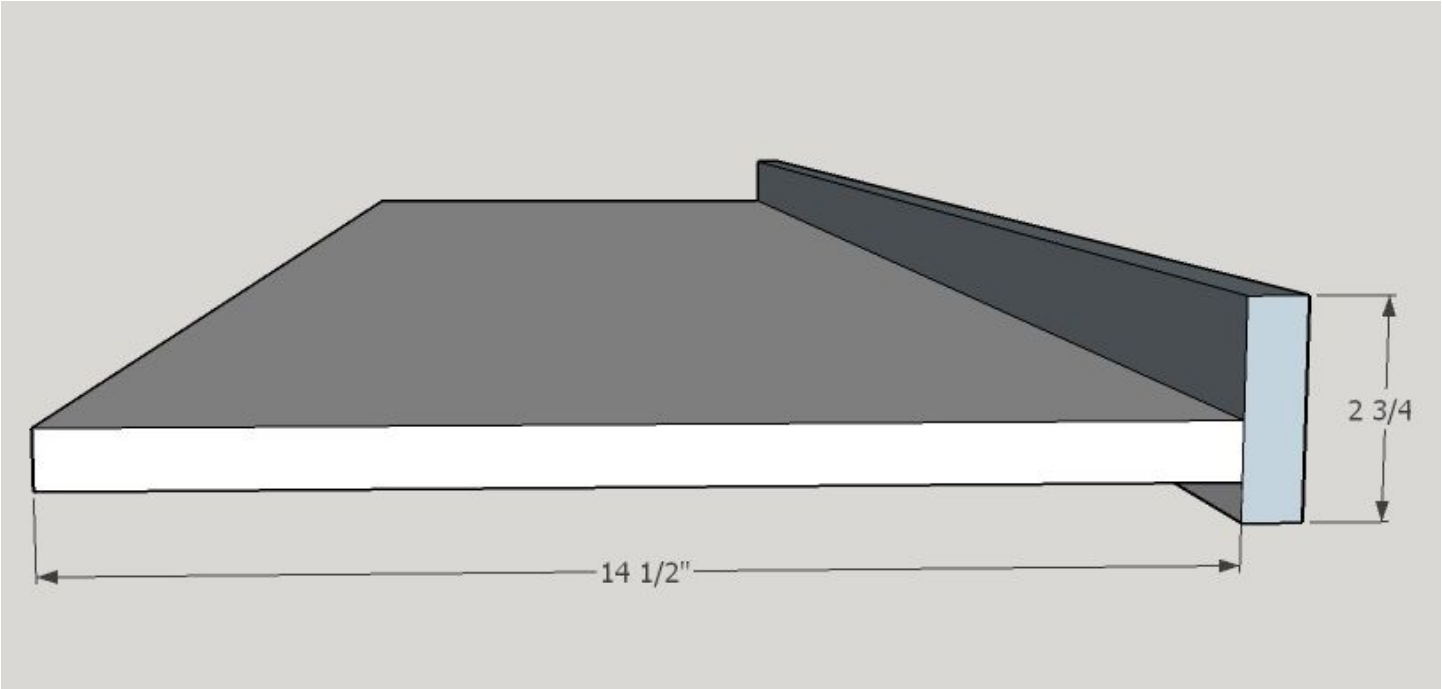

Figure 2-1

2-2 Attach the Back Facia to the top panel. Pre-drill holes using ⅛” bit about every 8-10”. Use a countersink so that the screw will be slightly recessed when inserted. Insert 2” screw (Not supplied).

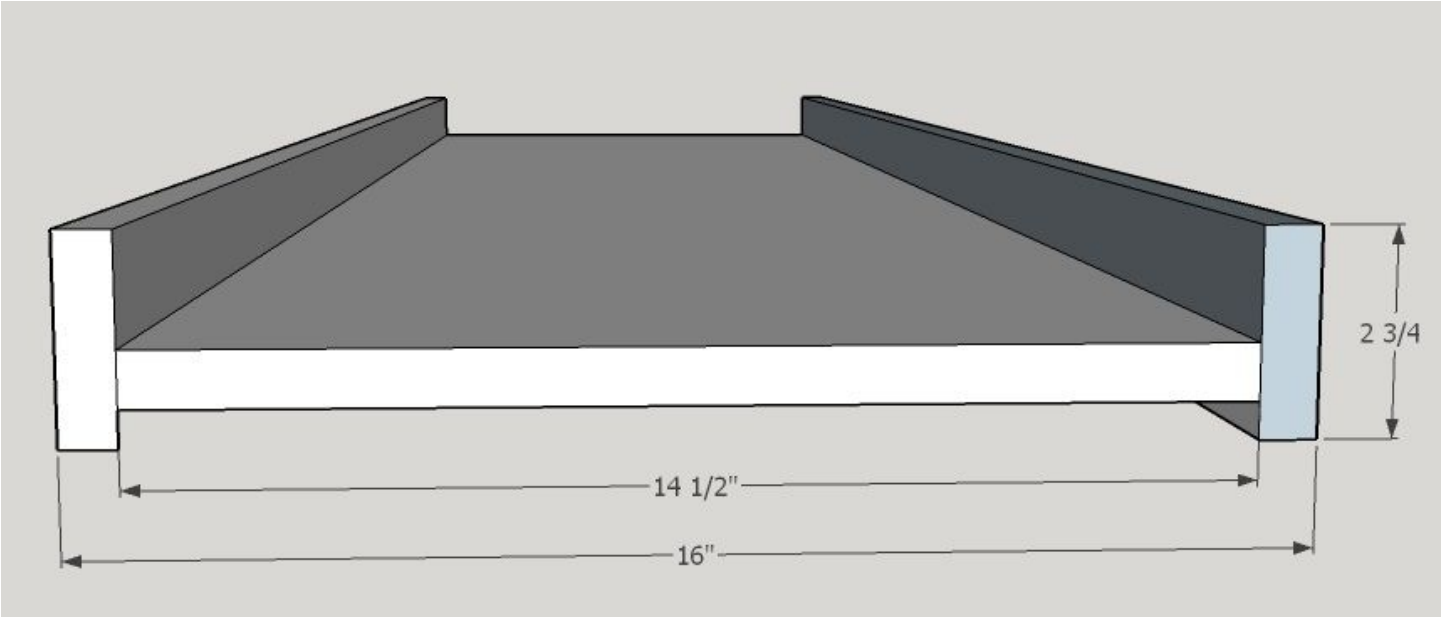

2-3 Attach the Header Cleats with 4-1 1/4” screws (Not supplied) on each end. Flush the cleats with the edge of the Top Facia (see figure 2-2)

2-4. Drill holes in the Header cleats as shown in figure 2-2. The holes will be use in the installation process.

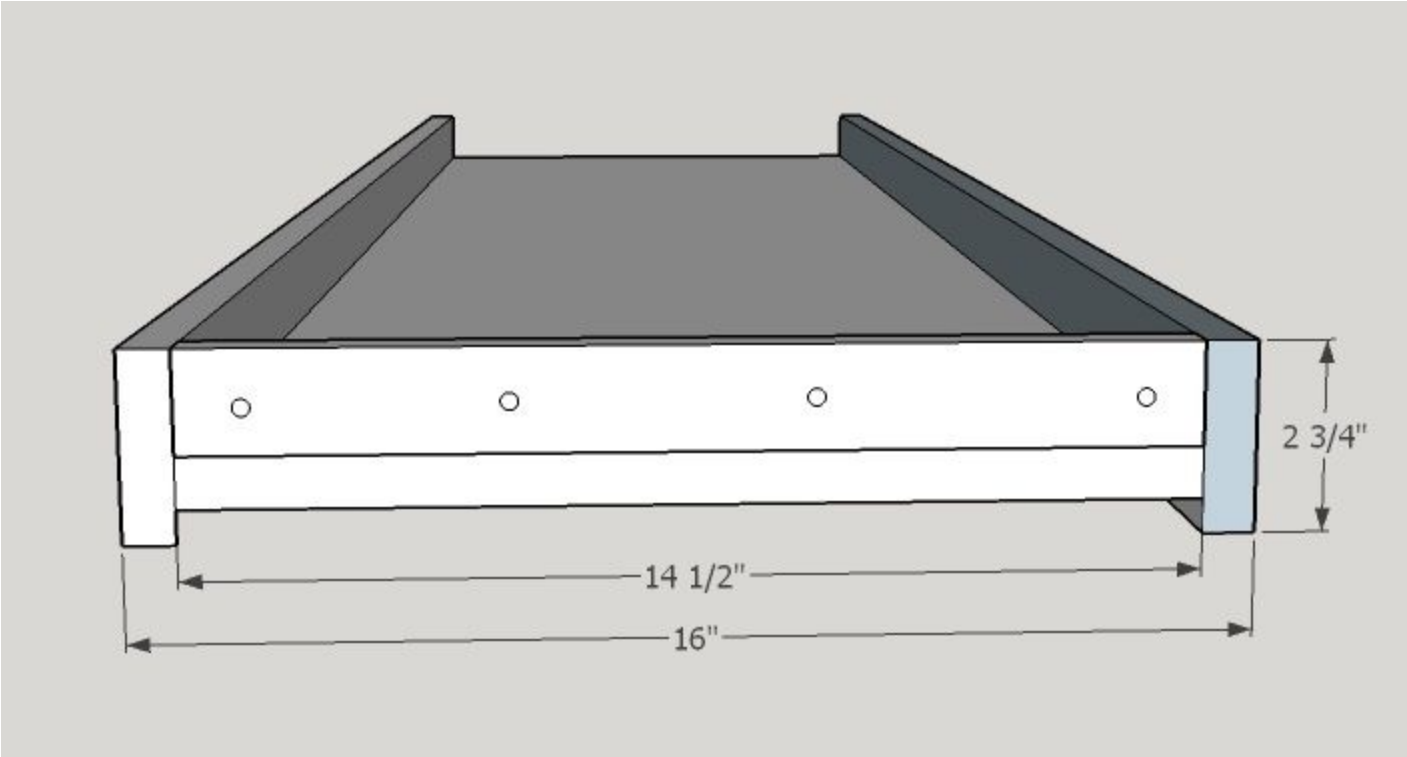

Figure 2-2

2-5 Attach the Header Stop to the underside of the Header toward the front. Pre-drill holes using ⅛” bit about every 8-10”. Use a countersink so that the screw will be slightly recessed when inserted. Attach with 1 ½” screws.

Your header is now complete!

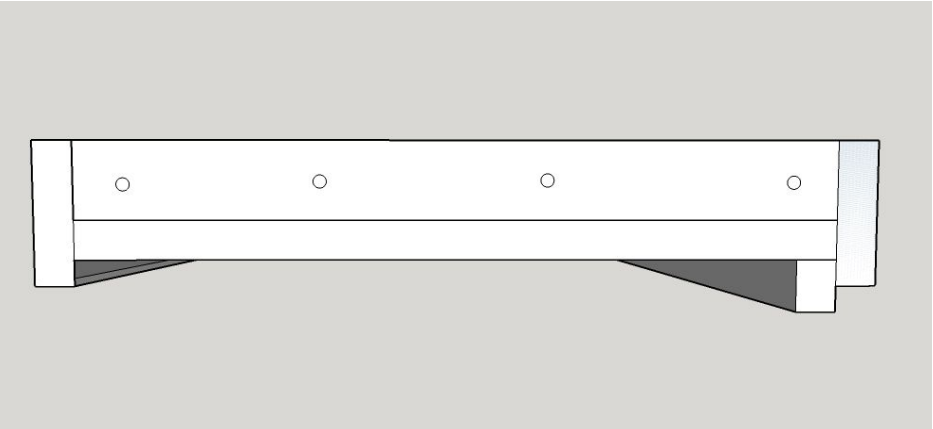

Step 3: Verticals

3-1. Exactly mark the mounting holes on the inside of each side panel.
3-2. Drill a 1/16” (2mm) pilot hole for each mounting bolt. Drill the final hole with a 5/16” (8mm) bit.
3-3. Counter sink 5/8” (15mm) on the outside of the panels just deep enough for the 5/16” x 1 1/4” (8x32mm) Machine Screws.
Do not mount the mechanism until after you’ve applied the finish.

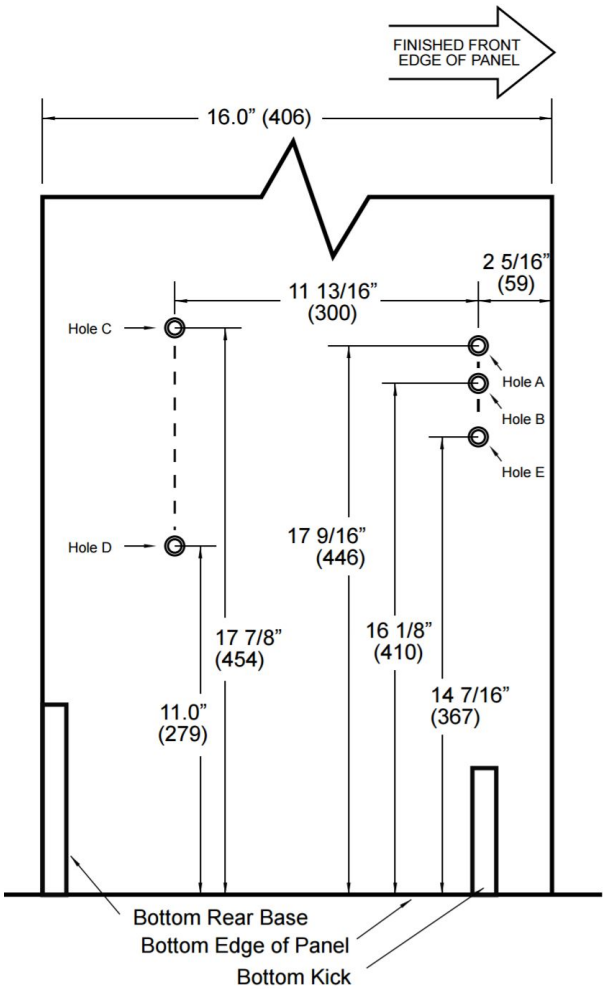

Tip: Cut out for your base molding:

On the back lower corner of the verticals a cut can be made to accommodate existing base molding so cabinet can fit flush against the wall. This will keep you from having to remove the base molding on the wall

Step 4: Finish the parts

You should now have:

- 2 to 4 - (A) Bed Face Panels (depending on size)
- 2-(B) Verticals
- The Top Panel/Header built in step 3 | from parts:
    - (D) Top Panel
    - 2-(E) Top Facia
    - (H) Header Cleats
    - (I) Header Stop
- (C) Headboard
- (F) Bottom Rear Base
- (G) Bottom Kick

It is best to finish both sides. You can paint the parts or stain them. Minwax.com has great tips on finishing project. You can get some help there finding the product and how to apply the finish. See www.minwax.com

Step 5: Install the springs and the Lift Mechanism

SPRING APPLICATION CHART
Please Note: These are recommendations only. Actual number of springs required will depend on the total weight of the bed face unit including the mattress
and all bedding

BED SIZE	STANDARD FACE (NO DESK)	STANDARD FACE (ADDED DESK)
Single/Twin	4 Springs Vertical (3 Horizontal)	5 Springs Vertical (4 Horizontal)
Double/Full	5 Springs Vertical (4 Horizontal)	6 Springs Vertical (5 Horizontal)
Queen	6 Springs Vertical (5 Horizontal)	7 Springs Vertical (6 Horizontal)
King	8 Springs Vertical	9 Springs Vertical

After you have completed installing and checking the operation of your bed, you may find it necessary to add or remove springs to achieve the correct lift effort of between 5 to 10 pounds.

5-1: The left and right mechanism hole pattern will line up with the hole pattern on the Side Panel (B). The bolts will be fed through the side that has the counter sinks drilled.

5-2 Hole A will not have a standard nut. It is either a threaded hole or it will use a disk like bolt “Arm Lock Stop”. Get Hole A started.

5-3 Insert the bolt in the other holes and loosely tighten onto the nutes.

5-4 Once all are in place securely tighten using the Allen Wrench provided and a ½” wrench.

There are nine locations for springs. If the bed requires an even number of springs, do not use the center hole (#5 from the top). If the bed requires an odd number of springs, start with the center hole (#5 from the top) and work outward in both directions evenly.

Hook the springs so the open ends are facing outward. You may have to gently pry up the tension arm and slide the spring under and snap them into place in the proper hole, matching the same numbered hole from the top of the mechanism back plate. You should have an equal number of springs on each side of the center hole.
Use the same number of springs and the same layout on both the left and right mechanisms.

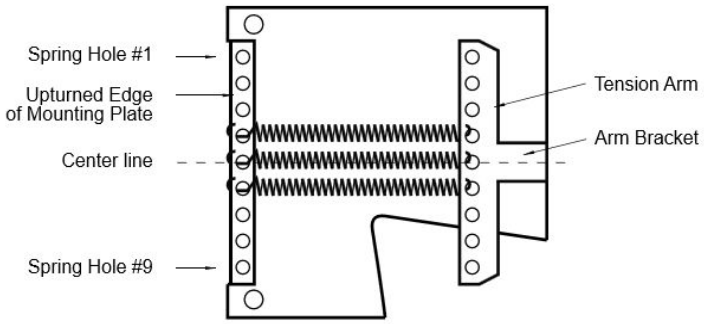

Step 6: Assemble the Bed Cabinet

For this step you’ll need the finished verticals, Top Panel/Header, Bottom Rear Base, and Bottom Kick. Hardware needed for this step will be 12 brackets, ¾” screws for the brackets, and

Headboard Installation

6-1: Locate the mounting position of the headboard (Use Drawing 7) marking the left and right side panels 20” (508mm) from the floor and 3” (76mm) in from the back edge of the panels. Note from Drawings 6 & 7 that this mounts the bottom edge of the headboard out 3” (76mm) from the back or wall edge of the Side Panels. Use the 1”x1”x1 3/4” (25x25x44mm) mounting brackets (2 each side). Be sure the top bracket is set low enough not to protrude beyond the back of the cabinet. Use #8x3/4” (M4x19mm) Pan head Screws. The Headboard location may vary slightly; just be sure it is secure and at the approximate 3“ (76mm) distance from the back edge.

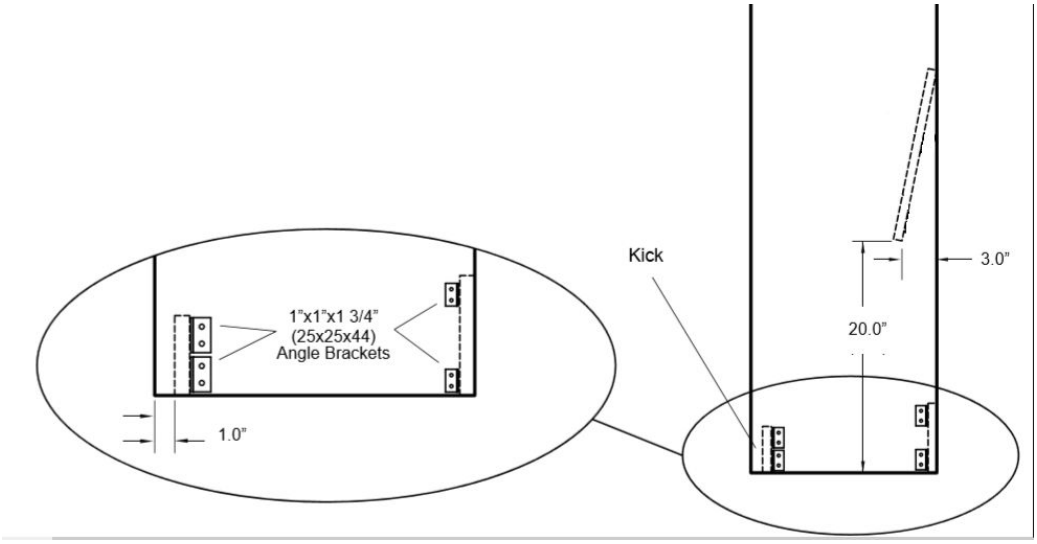

Drawing 7

Top Panel Installation

6-3: Attached the Top Panel/Header by flushing the front of the header to the front of the verticals and flushing them at the top. Screw it to the verticals using 1 ¼” screws through the Header Cleats.

Bottom Rear Base and Bottom Kick Installation

6-3: Stand the bed up in place. Use Angle Brackets to assemble Bottom Rear Base and Bottom Kick in position shown in Drawings 6 & 7. Use two Angle Brackets on each end. Attaching using supplied ¾” screws.

NOTE: The Bottom Rear base can be moved closer to the front if there is a cutout for base molding on the back of the verticals.

Brackets may be different than used in the drawing

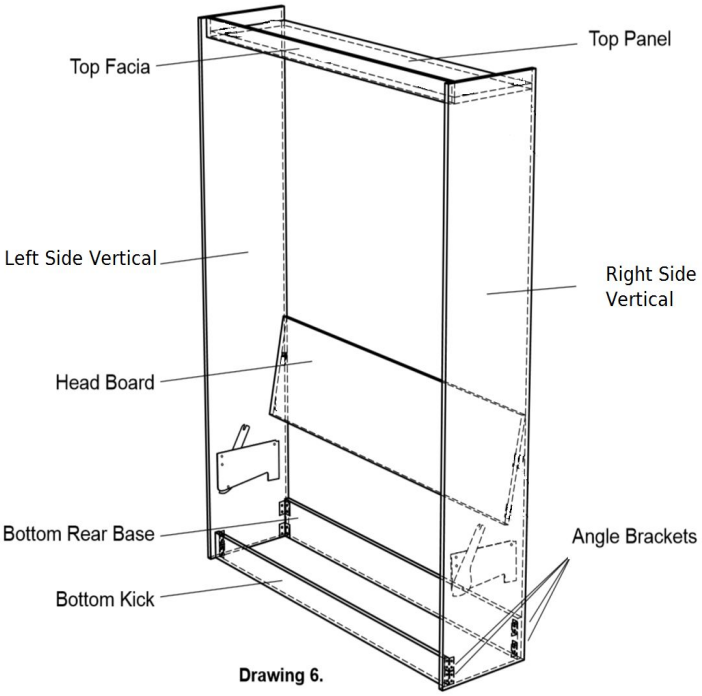

Drawing 6.

Step 7: Attach Bed Cabinet Securely to Wall

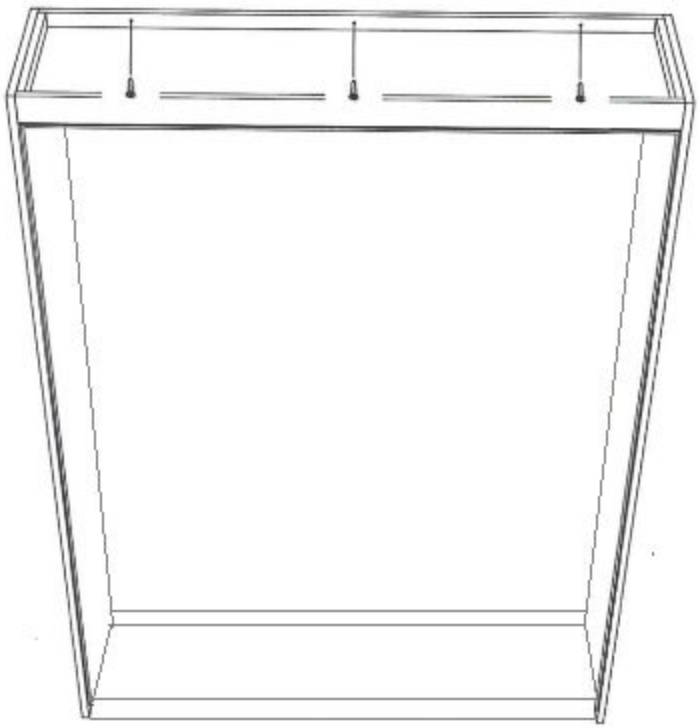

7-1: Find Studs
Prior to placing cabinet against the wall, locate 3 studs or other wall frame members at the level of the Top Panel (top of bed). Alert: The cabinet must be secured to studs or other wall structural members using L-Brackets. If the wall is not a wood stud wall, use metal stud screws, toggle bolts or concrete expansion bolts if necessary.

7-2: Attach to wall
Now that the cabinet is square and plumb, **pre-drill hole in that backboard of the header at the stud location and use 3” screws. Repeat this for two other stud locations.**

7-3 Pre-load the Tension Arm.
Holding one foot against the bottom front edge of the side panel and using the 13” (330mm) PVC tube or metal tensioner, lever the tension arm out until you can set the arm lock to the hex nut at the hole A (see drawing)

This is the hex nut at the top front corner of the mechanism.
(Some mechanisms have been replaced with a circular shaped stop for hole “A”)

Tip: If you set the “Arm Lock” on top of the bolt before you pull the Tension Arm back it will fall into place when you pull back far enough. Do not put your fingers back there to while pulling it back.!

Caution: If possible have a helper assist in the setting of the mechanism and loading of the bed face panel. DO NOT reach behind the tension arm when you are doing the setting procedure.

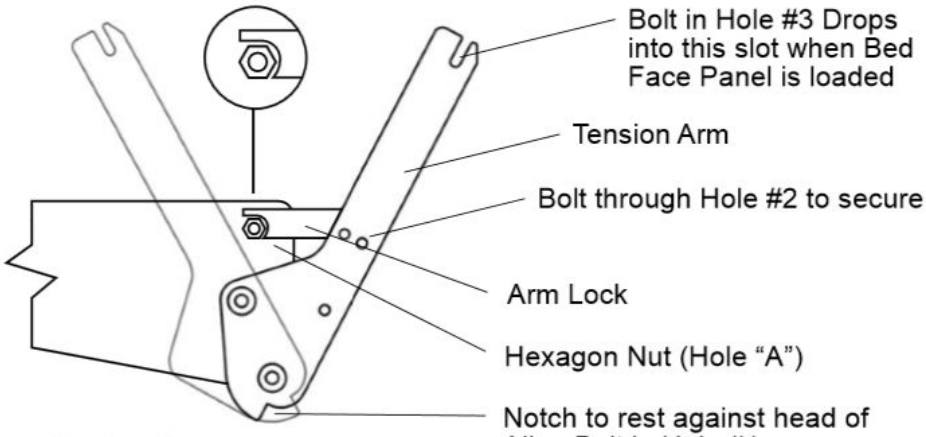

Drawing 13.

Step 8: Install the Bed Face Panel Unit

Frame laid out for assembly in the Vertical orientation.

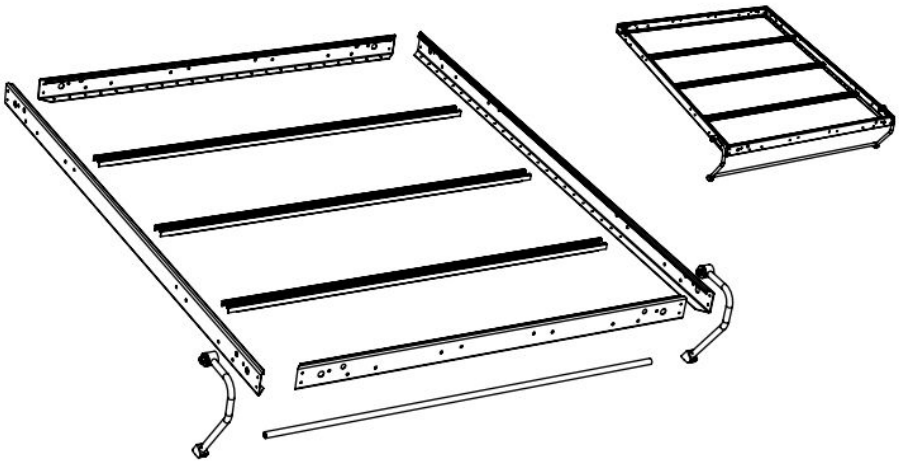

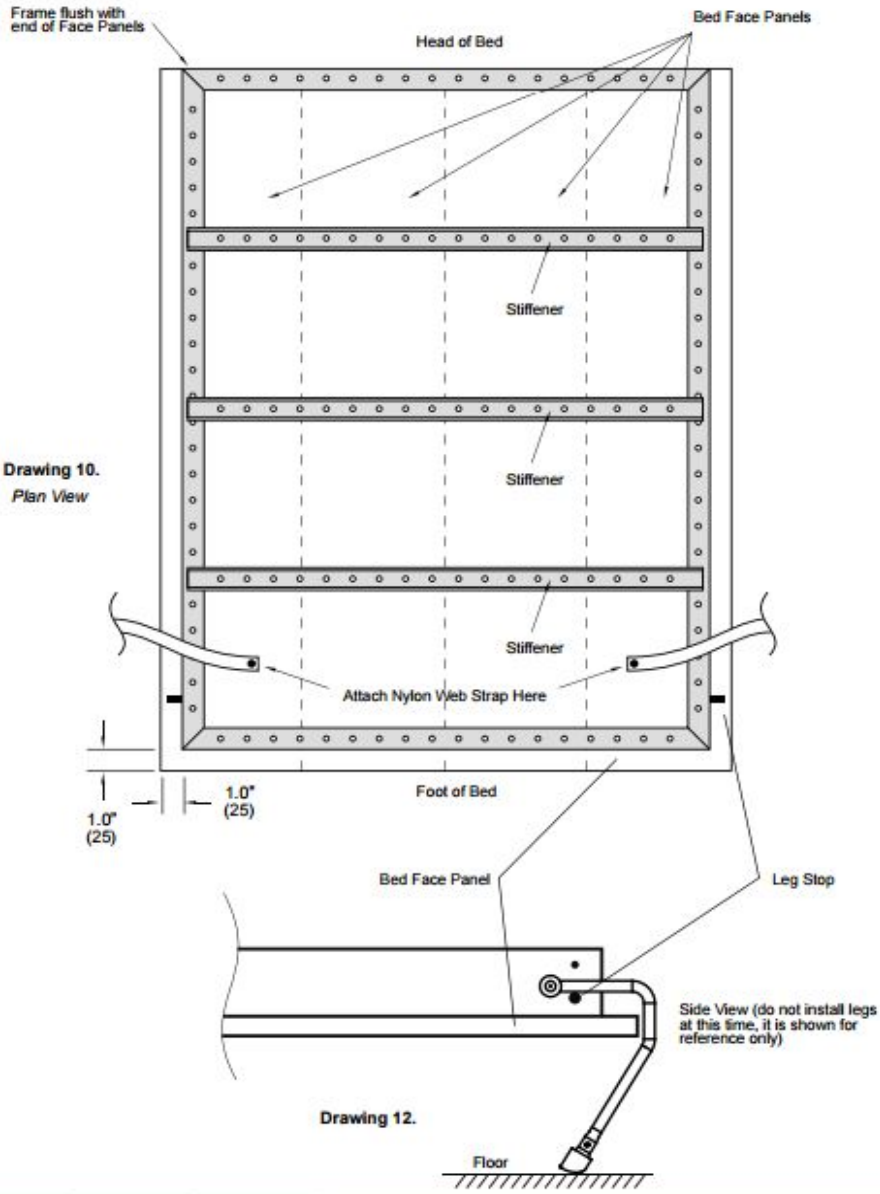

Drawing 10.
Plan View

Drawing 12.

8-1 Lay the Bed Face Panels down on a non-scratch surface such as a carpet or blanket. Make sure they the better side is face down and banded edges facing out and toward the foot of the bed.
(Note: both sides are finished but there usually is a better side. Better side is facing down. Also there may be edges that are raw with the plywood exposed. Make sure all these edge are on the inside and down.

8-2: Completely assemble the 4 Frame Sections with the corner brackets and the 3/16"x1/2" (M5x12mm) black bolts provided *(if you don't have space in another part of the room, then you assemble this section right on top of the face panels)*. Refer to Drawing 12 to properly place the leg stops at outer right and left bottom holes at the foot of the bed frame.

8-3: Position the bed frame on the bed face panels. With the Head Frame section flush with the head end of the Bed Face Panels. Refer to Drawing 10. Carefully attach the Bed Frame so it is centered on the Bed Face Panels; you will have approximately 15/16" (24mm) space from the bed frame to the panel edges right and left and at the bed foot.
Note: It is very important to have the Bed Frame centered on the Bed Face Panels. Any error will be noticed in the vertical sight lines when the bed is closed.

8-4: Three steel stiffeners are provided for all beds (5 for King). These notched stiffeners should be located and attached to divide the Bed Face length into four equal sections. Use caution not to damage raised panels by putting screws in recessed areas. Note: King Beds have 5 stiffeners (see diagram on pg. 6 for placement).

8-5: Attach the Nylon Web Strap approximately 18" (460mm) down from the foot of the bed and 6" (150mm) in from the sides, for tucking in sheets. The Straps help secure the mattress in the vertical position (see drawing above
.

8-6: From hardware card 2, insert a Allen Head Bolts through Hole #1 (6 3/4" from end of side frame) on both left and right side frames (see Drawing 14).

8-7 Also Inserted two 5/16" (M8x20mm) Hex Head Bolts from the outside of the frame through Hole #3. We have left these loose.

8-8 Stand the Bed Face Panel in vertical position between the tension arms, lift evenly until the bolt in Hole #3 drops in the slotted end of each tension arm. Gently tilt the bed face toward you until the Allen Bolts in Hole #1 are completely seated in the bottom notch of the tension arms. Insert the remaining 5/16" (8mm) Hex Head Bolts through tension arms into Holes #2 and fasten with 5/16" (8mm) Nylock Nuts; securely tighten these and the nuts on Hole #3.

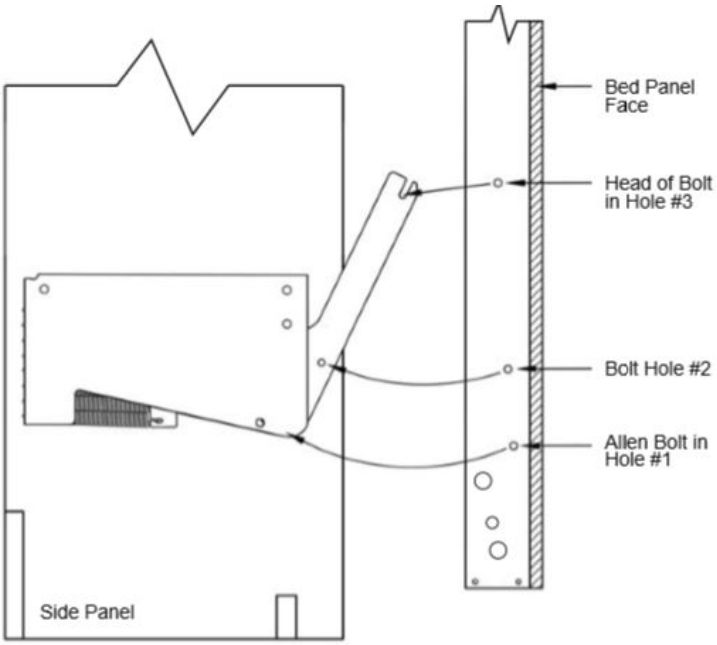

Drawing 14.

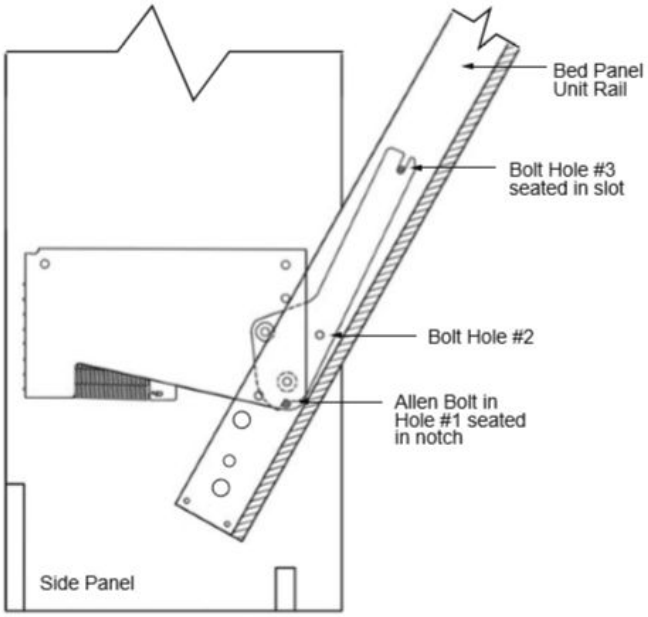

Drawing 15.

8-9 When all bolts are securely tightened, you may tilt the panel outward to approximately 45 degrees to release the arm locks. You will hear a click as they disengage.

Caution:
Hold the Face Panel securely, Do Not let it slam shut. Balance is not achieved until the mattress is loaded in the bed.

Leveling of the bed cabinet is essential. Check the level both side to side and front to back. Proper leveling will facilitate proper closure and exact sight lines of the fit of the Face Panel to the Cabinet.

Step 9: Install Handle = Legs - Mechanism Covers - Mattress

9-1 Position and secure handles for ease of operation. Measure down approximately 36” (914mm) from the panel top to the top of the handles.

9-2 Install legs with the washers on the inside of the Rails and the Nylon washer on the outside. Tighten nut to have a small amount of friction when leg assembly is rotated from the up to down position.

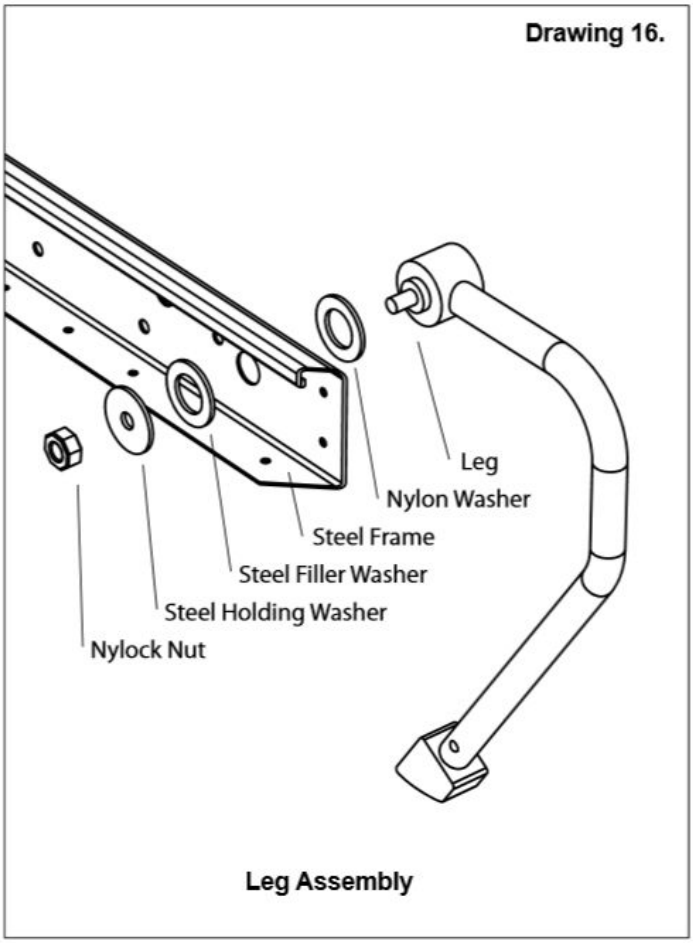

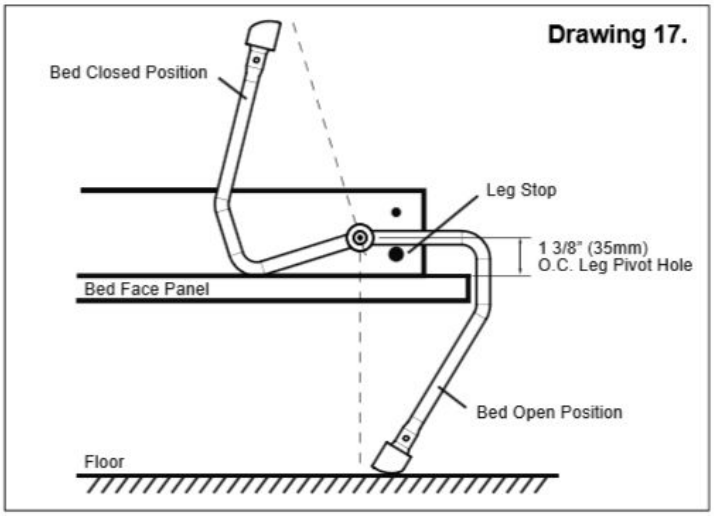

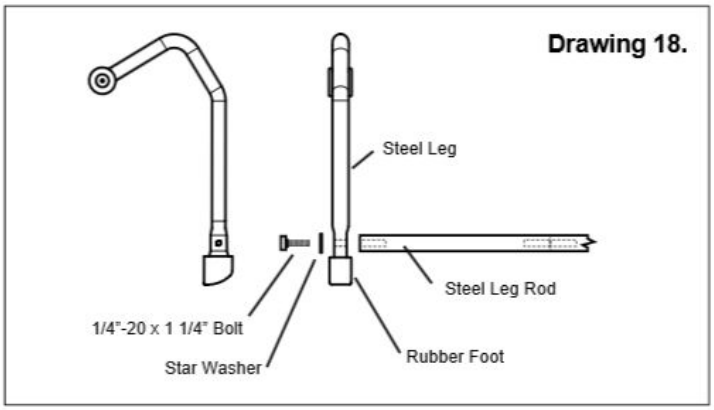

9-3 Install leg connector rod between legs and secure with 1/4”x1 1/4” (M4x32mm) Hex head bolts and star washers. Be sure they are securely tightened so not to become loose.

9-4 Install the mattress and secure with previously installed Nylon Straps.

9-5 Snap the powder coated steel mechanism covers in place - secure with #8x1 1/4” (M4x32mm) black wood screws through the standoff on the backer plate

Complete Bed Assembly

Follow up to Initial Assembly

Check that the Bed Cabinet is level and square so the Bed Face has equal clearance of the Cabinet on both sides, top to bottom. If the Cabinet is leaning to one side, nudge it at the floor level. If the top is uneven, place shims under the Side Panels. If bed is too heavy to operate easily or slams shut, remove the Bed Face Panel and add or subtract springs. At this time, you may decide to use one more or less spring(s) on the left or right side Lift Mechanism.

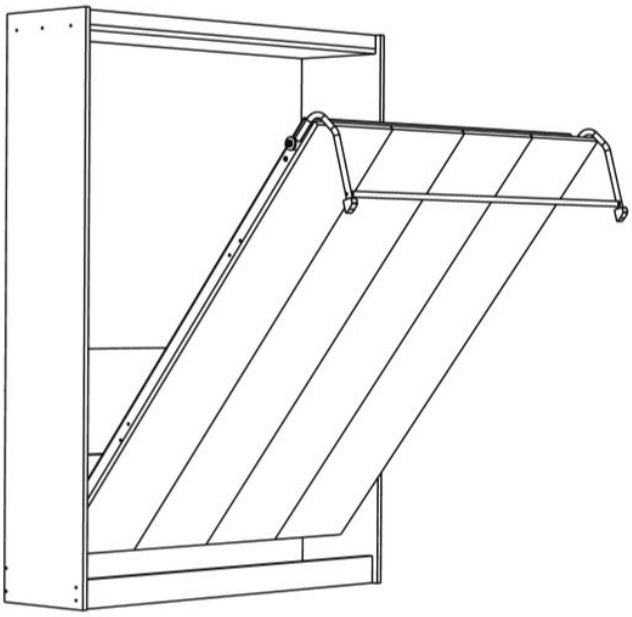

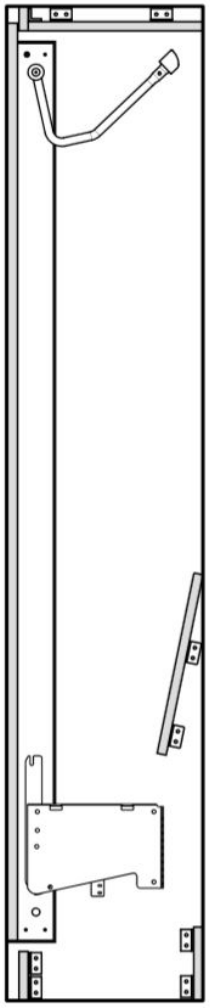

Right Side
Looking through Side Panel.